VILLAGE OF SUGAR GROVE
KANE COUNTY, ILLINOIS

Ordinance No. 2016-0405B

AN ORDINANCE ADOPTING CERTAIN NATIONAL CODES (2015 INTERNATIONAL BUILDING CODE)

Adopted by the
Board of Trustees and President of the Village of Sugar Grove
this 5th day of April, 2016

Published in pamphlet form by authority of the
Board of Trustees of the Village of Sugar Grove, Kane County, Illinois
this 5th day of April, 2016

VILLAGE OF SUGAR GROVE

ORDINANCE NO. 2016-0405B

AN ORDINANCE ADOPTING CERTAIN NATIONAL CODES (2015 INTERNATIONAL BUILDING CODE)

BE IT ORDAINED by the Board of Trustees of the Village of Sugar Grove, Kane County, Illinois as follows:

WHEREAS; the Village of Sugar Grove is not a home rule municipality within Article VII, Section 6A of the 1970 Constitution of the State of Illinois and therefore pursuant to those powers granted to it under Chapter 24, Paragraph 132 *et. seq.* of the Illinois Revised Statutes, and,

WHEREAS; the Board of Trustees finds that the best interest of the Village of Sugar Grove and the health and welfare of the residents of the Village are best served by regulating the construction, reconstruction, and maintenance of buildings and structures within the Village,

NOW THEREFORE BE IT ORDAINED by the President and Board of Trustees of the Village of Sugar Grove, Kane County, Illinois, as follows:

SECTION ONE: That Title 9, Chapter 1 of the Village Code shall be amended as follows:

Adoption: That a certain document entitled "The International Building Code, 2015 Edition" published by the International Code Council, 4051 West Flossmoor Road, Country Club Hills, Illinois, one copy of which is on file at the Building Division of the Community Development Department of the Village of Sugar Grove, is hereby adopted as the "Building Code" for the Village of Sugar Grove for regulating the design, construction, quality of materials, erection, installation, alteration, repair, location , relocation, replacement, addition to, use or maintenance of every building or structure or any appurtenances connected or attached to such buildings or structures in the Village of Sugar Grove as provided; and each and all of the regulations, provisions, penalties, conditions and terms of said "International Building Code, 2015 Edition" are adopted and made a part hereof, as if fully set out in the Code with the additions, insertions, deletions and changes prescribed in this ordinance.

SECTION TWO: That the sections of said codes adopted herein are revised and amended as follows:

Amendments: **2015 International Building Code**

1. **Section 101.1 Title** is hereby amended by replacing '[NAME OF JURISDICTION]" with "the Village of Sugar Grove"

2. **Section 101.4.3 Plumbing** is hereby amended by replacing "The provisions of the International Private Sewage Disposal Code shall apply to private sewage disposal systems." with "Private sewage disposal systems shall comply with the most current State of Illinois Plumbing Code, Kane County Health Department private sewage disposal system requirements, and any applicable adopted Village of Sugar Grove ordinances and amendments." and by adding the following

sentence: "All references to the International Plumbing Code shall be deemed to mean the Illinois Plumbing Code."

3. **Section 101.4 Referenced codes** is hereby amended by adding the following subsection: "**Section 101.4.8. Flood plain.** For buildings and structures located in whole or in part in flood hazard areas, as established on local floodway rate maps, the Kane County storm water ordinance, FEMA, Village of Sugar Grove flood plain ordinance, and all applicable federal, state, and locally adopted flood plain ordinances shall apply to floodplain construction."

4. **Section 103.1 Creation of enforcement agency** is hereby amended by replacing "building official" with 'Code Official" and adding the following sentence: "All references to building official in the 2015 International Building Code shall be construed to refer to Code Official.

5. **Section 103.2 Appointment** is hereby amended by replacing "The building official shall be appointed by the chief appointing authority of the jurisdiction." with "The Director of Community Development or their designee shall serve as the Code Official for the Village of Sugar Grove."

6. **Section 105.2 Work exempt from permit** is hereby amended by entirely deleting items numbered Building 1, 2, 3, 4, 5, 6, 9, 10, and 12.

7. **Section 105.5 Expiration** is hereby amended by adding the following sentences: "Every permit shall expire and become invalid after a period of one year from the date of issuance. Invalid and expired permits shall be subjected to additional plan review including new fees for such review as well as administrative fees for issuing said permit."

8. **Section 105.7 Placement of permit** is hereby amended by entirely deleting and replacing with "The building permit card shall be kept on the site of the work and be visible from the street until such time as a certificate of occupancy permit has been issued, or a final inspection has been performed and approved."

9. **Section 107.3.1 Approval of construction documents** is hereby amended by entirely deleting and replacing with "When the Code Official issues a permit, the construction documents shall be approved in writing or by stamp. One set of the approved construction documents as reviewed shall be retained by the Code Official. The other set shall be returned to the applicant and shall be kept on the site of the project and shall be open to inspection by the Code Official or his or her authorized agent / representative."

10. **Section 109.6 Refunds** is hereby amended by entirely deleting and replacing with "The Code Official shall authorize the refunding of fees on a case by case basis."

11. **Section 110.1 General** is hereby amended by adding the following sentences: "Construction or work for which a permit is required shall be subject to inspection by the code official and such construction or work shall remain accessible and exposed for inspection purposes until approved. Approval as a result of an inspection shall not be construed to be an approval of a violation of the provisions of this code or of other ordinances of the jurisdiction. Inspections presuming to give authority to violate or cancel the provisions of this code or of other ordinances of the jurisdiction shall not be valid. It shall be the duty of the permit applicant to cause the work to remain accessible and exposed for inspection purposes. Neither the code official nor the jurisdiction shall be liable for expense entailed in the removal or replacement of any material required to allow inspection."

12. **Section 113.1 General** is hereby amended by replacing "The board of appeals shall be appointed by the governing authority and shall hold office at its pleasure." with "The Board of Appeals shall consist of the Village Board of the Village of Sugar Grove."

13. **Section 113.3 Qualifications** is hereby amended by entirely deleting.

14. **Section 114.4 Violation penalties** is hereby amended by replacing "shall be subject to penalties as prescribed by law." with "shall be guilty of a petty offense, punishable by a fine of not more than $750.00 or by imprisonment not exceeding 180 days, or both such fine and imprisonment. Each day that a violation continues after due notice has been served shall be deemed a separate offense."

15. **Section 115 Stop work order** is hereby amended by adding the following subsection: "115.4 Emergency. Where an emergency exists, the code official shall not be required to give a written notice prior to stopping the work."

16. **Section 115.3 Unlawful continuance** is hereby amended by replacing "shall be subject to penalties as prescribed by law." with "shall be liable for a fine of not less than $100.00 or more than $750.00."

17. **Section 202 Definitions** is hereby amended by entirely deleting and replacing the stated definition of Townhouse with "Townhouse. A single-family dwelling unit constructed in a group of three to six attached units in which each unit extends from foundation to roof and with a yard or public way on not less than two sides. Buildings where more than six dwelling units are attached in this manner shall be governed by code provisions applicable to multiple family dwellings, rather than the provisions of this one- and two-family dwelling code."

18. **Section 406.3.4.1 Dwelling unit separation** is hereby amended by replacing all references to "1/2 inch gypsum board" with "5/8 inch type X gypsum board"

19. **Section 903.2 Where required** is hereby amended by adding the following sentences: "An automatic sprinkler system shall be provided throughout all buildings or structures where a fire area of any use or occupancy classification or combination of uses or occupancy classifications exceeds 5,000 square feet."

20. **Section 903.2.1.1 Group A-1** is hereby amended by replacing "12,000 square feet" with "0 square feet"

21. **Section 903.2.1.2 Group A-2** is hereby amended by replacing "5,000 square feet" with "0 square feet"

22. **Section 903.2.1.3 Group A-3** is hereby amended by replacing "12,000 square feet" with "0 square feet"

23. **Section 903.2.1.4 Group A-4** is hereby amended by replacing "12,000 square feet" with "0 square feet"

24. **Section 903.2.1.5 Group A-5** is hereby amended by replacing "1,000 square feet" with "0 square feet"

25. **Section 903.2.3 Group E** is hereby amended by replacing "12,000 square feet" with "0 square feet" and entirely deleting the exception.

26. **Section 903.2.4 Group F-1** is hereby amended item 1 by replacing "12,000 square feet" with "5,000 square feet" and item 3 by replacing "24,000 square feet" with "5,000 square feet"

27. **Section 903.2.7 Group M** is hereby amended item 1 by replacing "12,000 square feet" with "5,000 square feet" and item 3 by replacing "24,000 square feet" with "5,000 square feet"

28. **Section 903.2.9 Group S-1** is hereby amended item 1 by replacing "12,000 square feet" with "5,000 square feet" and item 3 by replacing "24,000 square feet" with "5,000 square feet"

29. **Section 903.2.9.1 Repair garages** is hereby amended item 1 by replacing "10,000 square feet" with "5,000 square feet" and item 2 by replacing "12,000 square feet" with "5,000 square feet"

30. **Section 903.2.9.2 Bulk storage of tires** is hereby amended by replacing "20,000 cubic feet" with "5,000 square feet or 20,000 cubic feet"

31. **Section 903.2.10 Group S-2 enclosed parking garages** is hereby amended by replacing "12,000 square feet" with "0 square feet" and entirely deleting the exception.

32. **Section 1013.1 Where required** is hereby amended by entirely deleting exception 1 and replacing it with "Exit signs are not required in rooms or areas where only one exit or exit access are provided and it is obviously and clearly identifiable as the exit."

33. **Section 1608 Snow Loads** is hereby amended by adding the following subsection: "**1608.4 Snow Load Minimum.** All structural designs in the Village of Sugar Grove shall meet or exceed a 25 pound ground snow load minimum with no reductions."

34. **Section 1612.3 Establishment of flood hazard areas** is hereby amended by replacing "[INSERT NAME OF JURISDICTION]" with "the Village of Sugar Grove" and "[INSERT DATE OF ISSUANCE]" with "most recent"

35. **Section 1612.4 Design and construction** is hereby amended by adding the following ", the Kane County storm water ordinance, FEMA, Village of Sugar Grove flood plain ordinance , and all applicable federal, state, and locally adopted flood plain ordinances."

36. **Section 1807.1 Foundation wall** is hereby amended by adding the following sentence: "Buildings and structures and the walls enclosing habitable or occupiable rooms shall be provided with a continuous foundations."

37. **Section 1807.1.4 Permanent wood foundation systems** is hereby amended by entirely deleting

38. **Section 1809.12 Timber** footings is hereby amended by entirely deleting

39. **Section 1810.3.2.4 Timber** is hereby amended by entirely deleting

40. **Section 2308.4.2 Floor joists** is hereby amended by adding the following subsection: "**2308.4.2.5 Fire protection of floors.** Floor assemblies in buildings without an automatic fire sprinkler system

that are not required elsewhere in this code to be fire-resistance rated, shall be provided with a 5/8-inch type x gypsum wallboard membrane, 5/8-inch structural panel membrane, or equivalent on the underside of the floor framing member.

Exceptions:

1. Floor assemblies located directly over a space protected by an automatic sprinkler system
2. Wood floor assemblies using dimension lumber or structural composite lumber equal to or greater than 2-inch by 10-inch (50.8 mm by 254 mm) nominal dimension, or other approved floor assemblies demonstrating equivalent fire performance.

41. **Chapter 32 Encroachments into the Public Right-of–way** is hereby amended by entirely deleting

SECTION THREE: Miscellaneous

A. That if any section, subsection, sentence, clause or phrase of this ordinance is, for any reason, held to be unconstitutional, such decision shall not affect the validity of the remaining portions of this ordinance. The Village of Sugar Grove hereby declares that it would have passed this ordinance, and each section, subsection, clause or phrase thereof, irrespective of the fact that any one or more sections, subsections, sentences, clauses and phrases be declared unconstitutional.

B. Savings: That nothing in this Ordinance or in the codes hereby adopted shall be construed to affect any suit or proceeding impending in any court, or any rights acquired, or liability incurred, or any cause or causes of action acquired or existing, under any act or ordinance hereby repealed as cited in Section 3 of this ordinance; nor shall any just or legal right or remedy of any character be lost, impaired or affected by this ordinance

C. Repealer: All ordinance or provisions of ordinances which are in conflict with this ordinance are hereby repealed.

D. Effective Date: This ordinance shall be in full force and effect from and after its passage, approval, and publication in pamphlet form as provided by law and after 6-1, 2016.

PASSED AND APPROVED by the President and Board of Trustees of the Village of Sugar Grove, Kane County, Illinois, on this 5th day of April, 2016.

	AYES	NAYS	ABSTAIN
Kevin Geary	✓		
Sean Herron	✓		
Mari Johnson	✓		
Ted Koch	✓		
Rick Montalto	✓		
David Paluch	✓		
Sean Michels			

VILLAGE OF SUGAR GROVE NOT FOR PROFIT SEAL 1957 ILLINOIS

P. Sean Michels

P. Sean Michels, Village President,
Village of Sugar Grove, Kane County, Illinois

ATTEST: Cynthia L. Galbreath

Cynthia L. Galbreath, Village Clerk,
Village of Sugar Grove, Kane County, Illinois

VILLAGE OF SUGAR GROVE
KANE COUNTY, ILLINOIS

Ordinance No. 2016-0405C

AN ORDINANCE ADOPTING CERTAIN NATIONAL CODES (2015 INTERNATIONAL FUEL GAS CODE)

Adopted by the
Board of Trustees and President of the Village of Sugar Grove
this 5th day of April, 2016

Published in pamphlet form by authority of the
Board of Trustees of the Village of Sugar Grove, Kane County, Illinois
this 5th day of April, 2016

VILLAGE OF SUGAR GROVE

ORDINANCE NO. 2016-0405C

AN ORDINANCE ADOPTING CERTAIN NATIONAL CODES (2015 INTERNATIONAL FUEL GAS CODE)

BE IT ORDAINED by the Board of Trustees of the Village of Sugar Grove, Kane County, Illinois as follows:

WHEREAS; the Village of Sugar Grove is not a home rule municipality within Article VII, Section 6A of the 1970 Constitution of the State of Illinois and therefore pursuant to those powers granted to it under Chapter 24, Paragraph 132 *et. seq.* of the Illinois Revised Statutes, and,

WHEREAS; the Board of Trustees finds that the best interest of the Village of Sugar Grove and the health and welfare of the residents of the Village are best served by regulating the construction, reconstruction, and maintenance of buildings and structures within the Village,

NOW THEREFORE BE IT ORDAINED by the President and Board of Trustees of the Village of Sugar Grove, Kane County, Illinois, as follows:

SECTION ONE: That Title 9, Chapter 1 of the Village Code shall be amended as follows:

Adoption: That a certain document entitled "The International Fuel Gas Code, 2015 Edition" published by the International Code Council, 4051 West Flossmoor Road, Country Club Hills, Illinois, one copy of which is on file at the Building Division of the Community Development Department of the Village of Sugar Grove, is hereby adopted as the "Fuel Gas Code" for the Village of Sugar Grove for regulating the design, construction, quality of materials, erection, installation, alteration, repair, location, relocation, replacement, addition to, use or maintenance of fuel gas systems and gas-fired appliances in the Village of Sugar Grove as provided; and each and all of the regulations, provisions, penalties, conditions and terms of said "International Fuel Gas Code, 2015 Edition" are adopted and made a part hereof, as if fully set out in the Code with the additions, insertions, deletions and changes prescribed in this ordinance.

SECTION TWO: That the sections of said codes adopted herein are revised and amended as follows:

Amendments: **2015 International Fuel Gas Code**

1. **Section 101.1 Title** is hereby amended by replacing '[NAME OF JURISDICTION]" with "the Village of Sugar Grove"

2. **Section 102.8 Referenced codes and standards** is hereby amended by adding the following sentence: "All references to the International Plumbing Code shall be deemed to mean the Illinois Plumbing Code."

3. **Section 103.2 Appointment** is hereby amended by replacing "The Code Official shall be appointed by the chief appointing authority of the jurisdiction." with "The Director of Community Development or their designee shall serve as the Code Official for the Village of Sugar Grove."

4. **Section 106.5.3 Expiration** is hereby amended by entirely deleting and replacing with "Every permit issued by the Code Official under the provisions of this code shall become invalid unless the work authorized by such permit is commenced within 180 days from its issuance or if the work authorized by such permit is suspended or abandoned for a period of 180 days after the time work is commenced. Every permit shall expire and become invalid after a period of one year from the date of its issuance. Invalid and expired permits shall be subjected to additional plan review including new fees for such review as well as administrative fees for issuing said permit."

5. **Section 106.5.4 Extensions** is hereby amended by replacing "A permit shall not be extended more than once. The fee for an extension shall be one-half the amount required for a new permit for such work." with "The Code Official is authorized to grant, in writing, one or more extensions of the time period of a permit for periods of not more than 180 days each. Such extensions shall be requested by the permit holder in writing and justifiable cause demonstrated."

6. **Section 106.6.2 Fee schedule** is hereby amended by entirely deleting and replacing with "Fees, including penalties, shall be determined by resolution of the Village Board of the Village of Sugar Grove."

7. **Section 106.6.3 Fee refunds** is hereby amended by entirely deleting and replacing with "The Code Official shall authorize the refunding of fees on a case by case basis."

8. **Section 107.1 General** is hereby amended by adding the following sentences: "It shall be the duty of the permit applicant to cause the work to remain accessible and exposed for inspection purposes. Neither the Code Official nor the jurisdiction shall be liable for expense entailed in the removal or replacement of any material required to allow inspection."

9. **Section 108.4 Violation penalties** is hereby amended by replacing "a [SPECIFY OFFENSE], punishable by a fine of not more than [AMOUNT] dollars or by imprisonment not exceeding [NUMBER OF DAYS], or both such fine and imprisonment." with "a petty offense, punishable by a fine of not more than $750.00 dollars or by imprisonment not exceeding 180 days, or both such fine and imprisonment."

10. **Section 108.5 Stop work orders** is hereby amended by inserting in the blanks "$100.00" and "$750.00"

11. **Section 109.2 Membership of board** and all subsections are hereby amended by entirely deleting and replacing with "The Board of Appeals shall consist of the Village Board of the Village of Sugar Grove."

12. **Section 303.3 Prohibited locations** is hereby amended by adding the following subsection: "**303.3.1 Residential occupancies.** Units designed to condition habitable spaces of the home shall not be located in a garage, except as permitted by 2015 International Mechanical Code section 303.3 exception #3. The installation shall comply with section 305.3 Elevation of ignition source."

13. **Section 403.4.4 Aluminum** is hereby amended by entirely deleting.

14. **Section 403.5.3 Aluminum tubing** is hereby amended by entirely deleting

15. **Section 403.5.4 Corrugated stainless steel tubing** is hereby amended by entirely deleting

16. **Section 404.13 Trenches** is hereby amended by adding the following subsection: "**Section 404.13.1 Separation.** Exterior fuel gas piping and electric lines in underground trenches shall be horizontally separated a minimum of twelve inches."

17. **Section 407.2 Design and installation** is hereby amended by adding the following subsection: "**Section 407.2.1 Structural attachment.** All fuel gas piping shall be supported or fastened directly to the structural supports of the building. Fuel gas piping shall not be hung from the roof or floor deck above or from any other ductwork or piping."

18. **Section 411.1 Connecting appliances** is hereby amended by replacing "Except as required by Section 411.1.1, appliances shall be connected to the piping system by one of the following:" with "Furnaces, water heaters, and boilers (unless specifically required by the manufacturer) shall be connected to the gas piping system by only rigid metallic pipe and fittings. Appliances, except for furnaces, water heaters, boilers, and as required by section 411.1.1 shall be connected to the gas piping system by one of the following:"

19. Appendices A, B, C, and D shall be adopted and inserted as part of this code.

SECTION THREE: Miscellaneous

A. That if any section, subsection, sentence, clause or phrase of this ordinance is, for any reason, held to be unconstitutional, such decision shall not affect the validity of the remaining portions of this ordinance. The Village of Sugar Grove hereby declares that it would have passed this ordinance, and each section, subsection, clause, or phrase thereof, irrespective of the fact that any one or more sections, subsections, sentences, clauses, and phrases be declared unconstitutional.

B. Savings: That nothing in this Ordinance or in the codes hereby adopted shall be construed to affect any suit or proceeding impending in any court, or any rights acquired, or liability incurred, or any cause or causes of action acquired or existing, under any act or ordinance hereby repealed as cited in Section 3 of this ordinance; nor shall any just or legal right or remedy of any character be lost, impaired or affected by this ordinance.

C. Repealer: All ordinance or provisions of ordinances which are in conflict with this ordinance are hereby repealed.

D. Effective Date: This ordinance shall be in full force and effect from and after its passage, approval, and publication in pamphlet form as provided by law and after 6-1, 2016.

PASSED AND APPROVED by the President and Board of Trustees of the Village of Sugar Grove, Kane County, Illinois, on this 5th day of April, 2016.

	AYES	NAYS	ABSTAIN
Kevin Geary	✓		
Sean Herron	✓		
Mari Johnson	✓		
Ted Koch	✓		
Rick Montalto	✓		
David Paluch	✓		
Sean Michels			

VILLAGE OF SUGAR GROVE NOT FOR PROFIT SEAL 1957 ILLINOIS

P. Sean Michels

P. Sean Michels, Village President,
Village of Sugar Grove, Kane County, Illinois

ATTEST: Cynthia L. Galbreath

Cynthia L. Galbreath, Village Clerk,
Village of Sugar Grove, Kane County, Illinois

VILLAGE OF SUGAR GROVE
KANE COUNTY, ILLINOIS

Ordinance No. 2016-0405D

AN ORDINANCE ADOPTING CERTAIN NATIONAL CODES (2015 INTERNATIONAL MECHANICAL CODE)

Adopted by the
Board of Trustees and President of the Village of Sugar Grove
this 5th day of April, 2016

Published in pamphlet form by authority of the
Board of Trustees of the Village of Sugar Grove, Kane County, Illinois
this 5th day of April, 2016

VILLAGE OF SUGAR GROVE

ORDINANCE NO. 20160405D

AN ORDINANCE ADOPTING CERTAIN NATIONAL CODES (2015 INTERNATIONAL MECHANICAL CODE)

BE IT ORDAINED by the Board of Trustees of the Village of Sugar Grove, Kane County, Illinois as follows:

WHEREAS; the Village of Sugar Grove is not a home rule municipality within Article VII, Section 6A of the 1970 Constitution of the State of Illinois and therefore pursuant to those powers granted to it under Chapter 24, Paragraph 132 *et. seq.* of the Illinois Revised Statutes, and,

WHEREAS; the Board of Trustees finds that the best interest of the Village of Sugar Grove and the health and welfare of the residents of the Village are best served by regulating the construction, reconstruction, and maintenance of buildings and structures within the Village,

NOW THEREFORE BE IT ORDAINED by the President and Board of Trustees of the Village of Sugar Grove, Kane County, Illinois, as follows:

SECTION ONE: That Title 9, Chapter 1 of the Village Code shall be amended as follows:

Adoption: That a certain document entitled "The International Mechanical Code, 2015 Edition" published by the International Code Council, 4051 West Flossmoor Road, Country Club Hills, Illinois, one copy of which is on file at the Building Division of the Community Development Department of the Village of Sugar Grove, is hereby adopted as the "Mechanical Code" for the Village of Sugar Grove for regulating the design, construction, quality of materials, erection, installation, alteration, repair, location , relocation, replacement, addition to, use or maintenance of mechanical systems in the Village of Sugar Grove as provided; and each and all of the regulations, provisions, penalties, conditions and terms of said "International Mechanical Code, 2015 Edition" are adopted and made a part hereof, as if fully set out in the Code with the additions, insertions, deletions and changes prescribed in this ordinance.

SECTION TWO: That the sections of said codes adopted herein are revised and amended as follows:

Amendments: **2015 International Mechanical Code**

1. **Section 101.1 Title** is hereby amended by replacing "[NAME OF JURISDICTION]" with "the Village of Sugar Grove".

2. **Section 102.8 Referenced codes and standards** is hereby amended by adding the following sentence: "All references to the International Plumbing Code shall be deemed to mean the Illinois Plumbing Code.

3. **Section 103.2 Appointment** is hereby amended by replacing "The Code Official shall be appointed by the chief appointing authority of the jurisdiction," with "The Director of Community Development or their designee shall serve as the Code Official for the Village of Sugar Grove."

4. **Section 106.4.3 Expiration** is hereby amended by entirely deleting and replacing with "Every permit issued by the Code Official under the provisions of this code shall become invalid unless the work authorized by such permit is commenced within 180 days from its issuance or if the work authorized by such permit is suspended or abandoned for a period of 180 days after the time work is commenced. Every permit shall expire and become invalid after a period of one year from the date of its issuance. Invalid and expired permits shall be subjected to additional plan review, including new fees for such review, as well as administrative fees for issuing said permit."

5. **Section 106.4.4 Extensions** is hereby amended by replacing "A permit shall not be extended more than once. The fee for an extension shall be one-half the amount required for a new permit for such work." with "The Code Official is authorized to grant, in writing, one or more extensions of the time period of a permit for periods of not more than 180 days each. Such extensions shall be requested by the permit holder in writing and justifiable cause demonstrated."

6. **Section 106.5.2 Fee Schedule** is hereby amended by replacing "[JURISDICTION TO INSERT APPROPRIATE SCHEDULE]" with "Fees shall be determined by resolution of the Village Board of the Village of Sugar Grove."

7. **Section 106.5.3 Fee Refunds** is hereby amended entirely deleting and replacing with "The Code Official shall authorize the refunding of fees on a case by case basis."

8. **Section 107.1 General is** hereby amended by adding the following sentences: "It shall be the duty of the permit applicant to cause the work to remain accessible and exposed for inspection purposes. Neither the Code Official nor the jurisdiction shall be liable for expense entailed in the removal or replacement of any material required to allow inspection."

9. **Section 107.3 Testing** is hereby amended by adding the following subsection: "**107.3.4 Certified Test and Balance Report.** A certified test and balance report shall be submitted and approved prior to final occupancy. The Code Official shall have the authority to waive the requirement at his discretion."

10. **Section 108.4 Violation Penalties** is hereby amended by replacing "[SPECIFY OFFENSE]" with "petty offense"; "[AMOUNT]" with "$750.00"; and "[NUMBER OF DAYS]" with "180 days".

11. **Section 108.5 Stop work orders** is hereby amended by replacing the first occurrence of "[AMOUNT]" with "$100.00" and the second occurrence of "[AMOUNT]" with "$750.00".

12. **Section 109.2 Membership of board** and all subsections are hereby amended by entirely deleting and replacing with "The Board of Appeals shall consist of the Village Board of the Village of Sugar Grove."

13. **Section 303.3 Prohibited locations** is hereby amended by adding the following subsection: "**303.3.1 Residential occupancies.** Units designed to condition habitable spaces of the home shall not be located in a garage, except as permitted by section 303.3 exception #3. The

installation shall comply with International Fuel Gas Code section 305.3 Elevation of ignition source."

14. **Section 305.3 Structural attachment** is hereby amended by adding the following sentences: "All mechanical piping and ductwork shall be supported or fastened directly to the structural supports of the building. Mechanical piping and ductwork shall not be hung from the roof or floor deck above or other ductwork or piping."

15. **Section 501.2 Independent system required** is hereby amended by adding the following sentence: "Single or combined mechanical exhaust systems from bath, toilet, urinal, locker, service sink closets, and similar rooms shall be independent of all other exhaust systems."

16. **Section 602.2.1 Materials within plenums** is hereby amended by adding the following sentence: "Nonmetallic ducts shall not be used in a non-combustible plenum."

17. **Section 602.2.1 Materials within plenums. Exception 1** is hereby amended by entirely deleting and replacing with "Rigid and flexible metallic ducts and connectors shall conform to Section 603."

18. **Section 603.10 Supports** is hereby amended by adding the following sentences: "All duct work or mechanical equipment shall be supported or fastened directly to the structural supports of the building. Mechanical equipment and duct work shall not be hung from the roof or floor deck above or other ductwork or piping."

19. **Section 801.14 Connections to exhauster** is here by amended by adding the following subsection: "**Section 801.14.1 Automatic Shutoff.** Power exhausters shall be electrically connected to each appliance to prevent the operation of the appliance when the power exhauster is not in operation."

20. **Appendix A** shall be adopted and inserted.

SECTION THREE: Miscellaneous

A. That if any section, subsection, sentence, clause or phrase of this ordinance is, for any reason, held to be unconstitutional, such decision shall not affect the validity of the remaining portions of this ordinance. The Village of Sugar Grove hereby declares that it would have passed this ordinance, and each section, subsection, clause or phrase thereof, irrespective of the fact that any one or more sections, subsections, sentences, clauses and phrases be declared unconstitutional.

B. Savings: That nothing in this Ordinance or in the codes hereby adopted shall be construed to affect any suit or proceeding impending in any court, or any rights acquired, or liability incurred, or any cause or causes of action acquired or existing, under any act or ordinance hereby repealed as cited in Section 3 of this ordinance; nor shall any just or legal right or remedy of any character be lost, impaired or affected by this ordinance.

C. Repealer: All ordinance or provisions of ordinances which are in conflict with this ordinance are hereby repealed.

D. Effective Date: This ordinance shall be in full force and effect from and after its passage, approval, and publication in pamphlet form as provided by law and after 6 – 1, 2016.

PASSED AND APPROVED by the President and Board of Trustees of the Village of Sugar Grove, Kane County, Illinois, on this 5th day of April, 2016.

	AYES	NAYS	ABSTAIN
Kevin Geary	✓		
Sean Herron	✓		
Mari Johnson	✓		
Ted Koch	✓		
Rick Montalto	✓		
David Paluch	✓		
Sean Michels			

VILLAGE OF SUGAR GROVE NOT FOR PROFIT SEAL 1957 ILLINOIS

P. Sean Michels

P. Sean Michels, Village President,
Village of Sugar Grove, Kane County, Illinois

ATTEST: Cynthia L. Galbreath

Cynthia L. Galbreath, Village Clerk,
Village of Sugar Grove, Kane County, Illinois

VILLAGE OF SUGAR GROVE
KANE COUNTY, ILLINOIS

Ordinance No. 2016-0405E

AN ORDINANCE ADOPTING CERTAIN NATIONAL CODES (2015 INTERNATIONAL PROPERTY MAINTENANCE CODE)

Adopted by the
Board of Trustees and President of the Village of Sugar Grove
this 5th day of April, 2016

Published in pamphlet form by authority of the
Board of Trustees of the Village of Sugar Grove, Kane County, Illinois
this 5th day of April, 2016

VILLAGE OF SUGAR GROVE

ORDINANCE NO. 2016-0405E

AN ORDINANCE ADOPTING CERTAIN NATIONAL CODES (2015 INTERNATIONAL PROPERTY MAINTENANCE CODE)

BE IT ORDAINED by the Board of Trustees of the Village of Sugar Grove, Kane County, Illinois as follows:

WHEREAS; the Village of Sugar Grove is not a home rule municipality within Article VII, Section 6A of the 1970 Constitution of the State of Illinois and therefore pursuant to those powers granted to it under Chapter 24, Paragraph 132 et. seq. of the Illinois Revised Statutes, and,

WHEREAS; the Board of Trustees finds that the best interest of the Village of Sugar Grove and the health and welfare of the residents of the Village are best served by regulating the construction, reconstruction, and maintenance of buildings and structures within the Village,

NOW THEREFORE BE IT ORDAINED by the President and Board of Trustees of the Village of Sugar Grove, Kane County, Illinois, as follows:

SECTION ONE: That Title 9, Chapter 1 of the Village Code shall be amended as follows:

Adoption: That a certain document entitled "The International Property Maintenance Code, 2015 Edition" published by the International Code Council, 4051 West Flossmoor Road, Country Club Hills, Illinois, one copy of which is on file at the Building Division of the Community Development Department of the Village of Sugar Grove, is hereby adopted as the "Property Maintenance Code" for the Village of Sugar Grove for regulating and governing the conditions and maintenance of all property, buildings, and structures in the Village of Sugar Grove as provided; and each and all of the regulations, provisions, penalties, conditions and terms of said "International Property Maintenance Code, 2015 Edition" are adopted and made a part hereof, as if fully set out in the Code with the additions, insertions, deletions and changes prescribed in this ordinance.

SECTION TWO: That the sections of said codes adopted herein are revised and amended as follows:

Amendments: **2015 International Property Maintenance Code**

1. **Section 101.1 Title** is hereby amended by replacing "[NAME OF JURISDICTION]" with "the Village of Sugar Grove"

2. **Section 102.3 Application of other codes** is hereby amended by entirely deleting and replacing with "Repairs, additions, or alterations to a structure, or changes of occupancy, shall be done in accordance with the procedures and provisions of the International Building Code, International Energy Conservation Code, International Fire Code, International Fuel Gas Code, International Mechanical Code, International Residential Code, Illinois Plumbing Code, and NFPA 70. Nothing

in this code shall be construed to cancel, modify, or set aside any provisions of the Village of Sugar Grove Zoning Ordinance."

3. **Section 102.7 Referenced codes and standards** is hereby amended by adding the following sentence: "All references to the International Plumbing Code shall be deemed to mean the Illinois Plumbing Code."

4. **Section 103.2 Appointment** is hereby amended by replacing "The Code Official shall be appointed by the chief appointing authority of the jurisdiction." with "The Director of Community Development or their designee shall serve as the Code Official for the Village of Sugar Grove."

5. **Section 103.5 Fees** is hereby amended by replacing "[JURISDICTION TO INSERT APPROPRIATE SCHEDULE]" with "Fees shall be determined by resolution of the Village Board of the Village of Sugar Grove."

6. **Section 108.1.3 Structure unfit for human occupancy** is hereby amended by entirely deleting and replacing with "The designation of a structure as unfit for occupancy or use and the posting of a placard of such unfit structures shall be carried out in compliance with the following requirements:
   A. Any structure which is found the Code Official to have any of the following defects shall be designated as unfit for occupancy or use and shall be so posted with a placard by the Code Official:
      1. One which is so decayed, dilapidated, unsanitary, unsafe, or vermin infested that it creates a serious hazard to the health or safety of the occupants or of the public.
      2. One which lacks illumination, ventilation, heat, sanitation facilities, utilities, or other essential equipment required by this code or because the location of the structure constitutes a hazard to the occupants of the structure or to the public.
      3. One which has been damaged by fire, wind, or explosion so that it does not provide adequate shelter from the elements, or appears to be structurally unsafe.
      4. One which through misuse, improper maintenance, or abuse appears to have a preponderance of flagrant noncompliance of the various requirements of the Building Code.
   B. Any structure designated as unfit for occupancy or use, and so placarded by the Code Official, shall be vacated within a reasonable time as ordered by the Code Official. Once vacated, entry shall be allowed only by persons directly associated with the repair or renovation of the structure, the owner or owner's designee for the purpose of inspection, or the Building Official or his designees.
   C. No structure which has been designated and placarded as unfit for occupancy or use shall again be occupied or used until written approvals are secured from the Code Official. The Code Official shall remove such placard whenever the defect or defects upon which the designation action was based have been corrected or eliminated.
   D. No person shall deface or remove the placard from any structure which has been designated as unfit for occupancy or use and placarded as such, except as provided in subsection C above this section."

7. **Section 111.2 Membership of board** and all subsections are hereby amended by entirely deleting and replacing with "The Board of Appeals shall consist of the Village Board of the Village of Sugar Grove."

8. **Section 112.4 Failure to comply** is hereby amended by replacing "a fine of not less than [AMOUNT] dollars or more than [AMOUNT] dollars" with "a fine of not less than $100.00 dollars or more than $750.00 dollars."
9. **Section 302.2 Grading and drainage** is hereby amended by adding the following sentence: "All properties shall be maintain grading and drainage in strict conformance with the approved site grading plan."

10. **Section 302.3 Sidewalks and driveways** is hereby amended by adding the following sentence: "All parking lot striping including accessible parking spaces and signage shall be maintained and updated in accordance with all the requirements of the applicable Village of Sugar Grove ordinances and the Illinois Accessibility Code."

11. **Section 302.4 Weeds** is hereby amended by replacing "[JURISDICTION TO INSERT HEIGHT IN INCHES]" with "eight (8) inches in height"

12. **Section 304.3 Premises identification** is hereby amended by replacing "4 inches in height" with "6 inches in height"

13. **Section 304.14 Insect screens** is hereby amended by replacing "from [DATE] to [DATE]" with "from April 1 to November 1"

14. **Section 308 Rubbish and Garbage** is hereby amended by adding the following subsection: "**308.4 Placement at designated pick-up area.** Rubbish, garbage, garbage cans and / or recycling containers shall be placed out on the designated pick up area no earlier than 3:00 p.m. (1500 hours) the day before pick up. Cans and containers shall be removed from the designated pick up area no later than 8:00 p.m. (2000 hours) the day of pick-up."

15. **Section 404.3 Minimum ceiling heights exception #2** is hereby amended by adding "bathroom, toilet room," after "occupied exclusively for laundry,"

16. **Section 404.4.4 Prohibited occupancy** is hereby amended by entirely deleting and replacing with "Kitchens, closets and storage rooms, utility rooms, laundry rooms, dens, hallways, stairs, bathrooms and toilet rooms, garages, accessory buildings, crawl spaces, attics, uninhabitable spaces, interior public areas, and rooms not designed or intended as sleeping rooms or bedrooms shall not be occupied for sleeping purposes."

17. **Section 404.4.5 Other requirements** is hereby amended by replacing "and the smoke detector and emergency escape requirements of Chapter 7" with "and the fire safety requirements of Chapter 7."

18. **Section 501.1 Scope** is hereby amended by adding " and the Illinois Plumbing Code" after "The provisions of this chapter"

19. **Section 601.1 Scope** is hereby amended by adding " the maintenance provisions of the International Mechanical Code, and NFPA 70" after "The provisions of this chapter"

20. **Section 602.3 Heat supply** is hereby amended by replacing "from [DATE] to [DATE]" with "from September 1 to May 1"

21. **Section 602.4 Occupiable work spaces** is hereby amended by replacing "from [DATE] to [DATE]" with "from September 1 to May 1"

22. **Section 701.1 Scope** is hereby amended by adding "and the International Fire Code " after "The provisions of this chapter"

23. **Section 702.3 Locked doors** is hereby amended by adding the following sentence: "Doors providing access to a sleeping room in a dwelling unit shall not have any locks, padlocks, hasps, or other locking devices which are not an integral part of the doorknob assembly."

SECTION THREE: Miscellaneous

A. That if any section, subsection, sentence, clause or phrase of this ordinance is, for any reason, held to be unconstitutional, such decision shall not affect the validity of the remaining portions of this ordinance. The Village of Sugar Grove hereby declares that it would have passed this ordinance, and each section, subsection, clause, or phrase thereof, irrespective of the fact that any one or more sections, subsections, sentences, clauses, and phrases be declared unconstitutional.

B. Savings: That nothing in this Ordinance or in the codes hereby adopted shall be construed to affect any suit or proceeding impending in any court, or any rights acquired, or liability incurred, or any cause or causes of action acquired or existing, under any act or ordinance hereby repealed as cited in Section 3 of this ordinance; nor shall any just or legal right or remedy of any character be lost, impaired or affected by this ordinance.

C. Repealer: All ordinance or provisions of ordinances which are in conflict with this ordinance are hereby repealed.

D. Effective Date: This ordinance shall be in full force and effect from and after its passage, approval, and publication in pamphlet form as provided by law and after 6- 1, 2016.

PASSED AND APPROVED by the President and Board of Trustees of the Village of Sugar Grove, Kane County, Illinois, on this 5th day of April, 2016.

	AYES	NAYS	ABSTAIN
Kevin Geary	✓		
Sean Herron	✓		
Mari Johnson	✓		
Ted Koch	✓		
Rick Montalto	✓		
David Paluch	✓		
Sean Michels			

VILLAGE OF SUGAR GROVE NOT FOR PROFIT SEAL 1957 ILLINOIS

P. Sean Michels

P. Sean Michels, Village President,
Village of Sugar Grove, Kane County, Illinois

ATTEST: Cynthia L. Galbreath

Cynthia L. Galbreath, Village Clerk,
Village of Sugar Grove, Kane County, Illinois

VILLAGE OF SUGAR GROVE
KANE COUNTY, ILLINOIS

Ordinance No. 2016-0405F

AN ORDINANCE ADOPTING CERTAIN NATIONAL CODES (2015 INTERNATIONAL RESIDENTIAL CODE)

Adopted by the
Board of Trustees and President of the Village of Sugar Grove
this 5th day of April, 2016

Published in pamphlet form by authority of the
Board of Trustees of the Village of Sugar Grove, Kane County, Illinois
this 5th day of April, 2016

VILLAGE OF SUGAR GROVE

ORDINANCE NO. 20160405F

AN ORDINANCE ADOPTING CERTAIN NATIONAL CODES (2015 INTERNATIONAL RESIDENTIAL CODE)

BE IT ORDAINED by the Board of Trustees of the Village of Sugar Grove, Kane County, Illinois as follows:

WHEREAS; the Village of Sugar Grove is not a home rule municipality within Article VII, Section 6A of the 1970 Constitution of the State of Illinois and therefore pursuant to those powers granted to it under Chapter 24, Paragraph 132 *et. seq.* of the Illinois Revised Statutes, and,

WHEREAS; the Board of Trustees finds that the best interest of the Village of Sugar Grove and the health and welfare of the residents of the Village are best served by regulating the construction, reconstruction, and maintenance of buildings and structures within the Village,

NOW THEREFORE BE IT ORDAINED by the President and Board of Trustees of the Village of Sugar Grove, Kane County, Illinois, as follows:

SECTION ONE: That Title 9, Chapter 1 of the Village Code shall be amended as follows:

Adoption: That a certain document entitled "The International Residential Code, 2015 Edition" published by the International Code Council, 4051 West Flossmoor Road, Country Club Hills, Illinois, one copy of which is on file at the Building Division of the Community Development Department of the Village of Sugar Grove, is hereby adopted as the "Residential Building Code" for the Village of Sugar Grove for regulating the design, construction, quality of materials, erection, equipment, installation, alteration, repair, location , relocation, replacement, addition to, and use or occupying of detached one- and two- family dwellings and townhouses not more than three stories above-grade in height with a separate means of egress and their accessory structures in the Village of Sugar Grove as provided; and each and all of the regulations, provisions, penalties, conditions and terms of said "International Residential Code, 2015 Edition" are adopted and made a part hereof, as if fully set out in the Code with the additions, insertions, deletions and changes prescribed in this ordinance.

SECTION TWO: That the sections of said codes adopted herein are revised and amended as follows:

Amendments: **2006 International Residential Code**

1. **Section R101.1 Title** is hereby amended by replacing '[NAME OF JURISDICTION]" with "the Village of Sugar Grove"

2. **Section R102.4 Referenced codes and standards** is hereby amended by adding the following sentence: "All references to the International Plumbing Code shall be deemed to mean the Illinois Plumbing Code."

3. **Section R103.1 Creation of enforcement agency** is hereby amended by replacing "building official" with 'Code Official" and adding the following sentence: "All references to building official in the 2015 International Residential Code shall be construed to refer to Code Official."

4. **Section R103.2 Appointment** is hereby amended by replacing "The building official shall be appointed by the jurisdiction." with "The Director of Community Development or their designee shall serve as the Code Official for the Village of Sugar Grove."

5. **Section R104.10.1 Flood hazard areas** is hereby amended by entirely deleting.

6. **Section R105.2 Work exempt from permit** is hereby amended by entirely deleting items numbered Building 1, 2, 3, 4, 5, 9, and 10.

7. **Section R105.2.3 Public service agencies** is hereby amended by entirely deleting.

8. **Section R105.3.2 Time limitation of application** is hereby amended by entirely deleting.

9. **Section R105.5 Expiration** is hereby amended by adding the following sentences: "Every permit shall expire and become invalid after a period of one year from the date of issuance. Invalid and expired permits shall be subjected to additional plan review including new fees for such review as well as administrative fees for issuing said permit."

10. **Section R105.7 Placement of permit** is hereby amended by entirely deleting and replacing with "The building permit card shall be kept on the site of the work and be visible from the street until such time as a certificate of occupancy permit has been issued, or a final inspection has been performed and approved."

11. **Section R106.1 Submitted documents** is hereby amended by adding the following sentence: "Construction documents shall be signed and stamped by an Illinois registered design professional for all new one- and two-family dwellings, townhouses, and all additions or alterations that require additional or changes to structural design."

12. **Section R106.1.4 Information for construction in flood hazard areas** is hereby amended by entirely deleting and replacing with "For buildings and structures located in whole or in part in flood hazard areas, as established on local floodway rate maps, locally adopted flood plain ordinances shall apply."

13. **Section R106.3.1 Approval of construction documents** is hereby amended by entirely deleting and replacing with "When the Code Official issues a permit, the construction documents shall be approved in writing or by stamp. One set of the approved construction documents as reviewed shall be retained by the Code Official. The other set shall be returned to the applicant and shall be kept on the site of the project and shall be open to inspection by the Code Official or his or her authorized agent / representative."

14. **Section 108.5 Refunds** is hereby amended by entirely deleting and replacing with "The Code Official shall authorize the refunding of fees on a case by case basis."

15. **Section R109.1 Types of inspections** is hereby amended by adding the following sentences: "Construction or work for which a permit is required shall be subject to inspection by the code

official and such construction or work shall remain accessible and exposed for inspection purposes until approved. Approval as a result of an inspection shall not be construed to be an approval of a violation of the provisions of this code or of other ordinances of the jurisdiction. Inspections presuming to give authority to violate or cancel the provisions of this code or of other ordinances of the jurisdiction shall not be valid. It shall be the duty of the permit applicant to cause the work to remain accessible and exposed for inspection purposes. Neither the code official nor the jurisdiction shall be liable for expense entailed in the removal or replacement of any material required to allow inspection."

16. **Section R112.1 General** is hereby amended by replacing "The building official shall be an ex officio member of said board but shall have no vote on any matter before the board. The board of appeals shall be appointed by the governing body and shall hold office at its pleasure." with "The Board of Appeals shall consist of the Village Board of the Village of Sugar Grove."

17. **Section R112.3 Qualifications** is hereby amended by entirely deleting.

18. **Section R113.4 Violation penalties** is hereby amended by replacing "shall be subject to penalties as prescribed by law." with "shall be guilty of a petty offense, punishable by a fine of not more than $750.00 or by imprisonment not exceeding 180 days, or both such fine and imprisonment. Each day that a violation continues after due notice has been served shall be deemed a separate offense."

19. **Section R114.2 Unlawful continuance** is hereby amended by replacing "shall be subject to penalties as prescribed by law." with "shall be liable for a fine of not less than $100.00 or more than $750.00."

20. **Section R114 Stop work order** is hereby amended by adding the following subsection: "**R114.3 Emergency**. Where an emergency exists, the code official shall not be required to give a written notice prior to stopping the work."

21. **Section R202 Definitions** is hereby amended by entirely deleting and replacing the stated definition for Accessory Structure with "**Accessory Structure.** A use or structure which is subordinate to and serves a principal building or principal use; is subordinate in area, extent or purpose to the principal building or principal use served; contributes to the comfort, convenience or necessity of occupants of the principal building or principal use served; and is located on the same zoning lot as the principal building or principal use served. All accessory structures shall conform to all area, height, and setback requirements set forth in the Village of Sugar Grove ordinances."

22. **Section R202 Definitions** is hereby amended by entirely deleting and replacing the stated definition for Manufactured Home with "**Manufactured Home.** A movable or portable unit, which is 8 body feet or more in width and is 32 body feet or more in length, and constructed to be towed on its own chassis (comprised of frame and wheels) from the place of construction to the location or subsequent locations, subject to the provisions of chapter 15 of the Illinois vehicle code, and designed to be used without a permanent foundation and connected to utilities for year round occupancy with or without a permanent foundation. The term shall include: (1) units containing parts that may be folded, collapsed, or telescoped when being towed and that may be expanded to provide additional cubic capacity, and (2) units composed of two or more separately towable components designed to be joined into one integral unit capable of being separated again

into the components for repeated towing. The term shall exclude recreational vehicles. A mobile home shall be considered a manufactured home."

23. **Section R202 Definitions** is hereby amended by adding the following stated definition for Modular Home. "**Modular Home.** A building assembly or system of building sub-assemblies, designed for habitation as a dwelling for one or more persons, including the necessary electrical, plumbing, heating, ventilating and other service systems, which is of closed or open construction and which is made or assembled by a manufacturer, on or off the building site, for installation, or assembly and installation, on the building site, with a permanent foundation."

24. **Section R202 Definitions** is hereby amended by entirely deleting and replacing the stated definition of Townhouse with "**Townhouse.** A single-family dwelling unit constructed in a group of three to six attached units in which each unit extends from foundation to roof and with a yard or public way on not less than two sides. Buildings where more than six dwelling units are attached in this manner shall be governed by code provisions applicable to multiple family dwellings, rather than the provisions of this one- and two-family dwelling code."

25. **Table R301.2(1) Climatic and Geographic Design Criteria** is hereby revised to read as follows:

GROUND SNOW LOAD	WIND DESIGN				SEISMIC DESIGN CATEGORY	SUBJECT TO DAMAGE FROM			WINTER DESIGN TEMP	ICE BARRIER UNDERLAYMENT REQUIRED	FLOOD HAZARDS	AIR FREEZING INDEX	MEAN ANNUAL TEMP
	Speed (mph)	Topographic effects	Special wind region	Wind-borne debris zone		Weathering	Frost line depth	Termite					
30	115	No	No	No	B	Severe	42 Inches	Mod to Heavy	-5F	Yes	Local Ordinance	2000	48.5

See captions under Table R301.2(1) in the book for exceptions and conditions of approvals.

26. **Section R301.2.4 Floodplain construction** is hereby amended by adding the following ", the Kane County storm water ordinance, FEMA, Village of Sugar Grove flood plain ordinance , and all applicable federal, state, and locally adopted flood plain ordinances."

27. **Section R302.2 Townhouses** is hereby amended by replacing "Common walls separating townhouses shall be assigned a fire-resistance rating in accordance with Section R302.2, Item 1 or 2." with "Common walls separating townhouses shall be not less than 2-hour fire-resistance-rated wall assembly tested in accordance with ASTM E 119 or UL 263." and entirely deleting Items 1 and 2.

28. **Section R302.3 Two-family dwellings** is hereby amended by replacing "1-hour fire-resistance rating" with "2-hour fire-resistance rating" and entirely deleting exceptions 1 and 2.

29. **Section R302.6 Dwelling-garage fire separation** is hereby amended by entirely deleting "The wall separation provisions of Table R702.6 shall not apply to garage walls that are perpendicular to the adjacent dwelling unit wall." and adding the following sentence: "All gypsum board applied to the garage side shall be taped with a minimum one coat of approved joint tape and compound."

30. **Table R302.6 Dwelling-Garage Separation** is hereby amended by replacing all references to "1/2 inch gypsum board" with "5/8 inch type X gypsum board" and replacing "3 feet" with "10 feet"

31. **Section R302.7 Under-stair protection** is hereby amended by replacing "1/2 inch gypsum board" with "5/8 inch type X gypsum board, taped with a minimum of one coat of approved joint compound."

32. **Section R302.13 Fire protection of floors** is hereby amended by replacing "1/2 inch gypsum wallboard membrane" with "5/8 inch type X gypsum board membrane" and entirely deleting exceptions 2 and 3.

33. **Section R302 Fire-Resistant Construction** is hereby amended by adding the following subsection: "**R302.15 Mold resistance.** All gypsum used in construction of fire-resistance rated wall assemblies shall be mold resistant."

34. **Section R303.3 Bathrooms** is hereby amended by entirely deleting the exception and replacing with "**Exception:** The glazed area shall not be required where artificial light and mechanical ventilation systems are provided. The minimum ventilation rates shall be 50 cfm for intermittent ventilation or 20 cfm for continuous ventilation. Ventilation air from the space shall be exhausted directly to the exterior of the structure by means of either the soffit area with an approved connection to the soffit or through the roof with an insulated (R-3) duct and approved roof fitting."

35. **Section R309.1 Floor surface** is hereby amended by adding the following sentences: "The garage floor shall be poured a minimum of 4 inches below the top of the foundation to form a gas curb at all walls of the garage abutting the house. If a stairwell occurs in a garage, a 4 inch minimum gas curb shall be provided around the stairwell."

36. **Section R310.2.2 Window sill height** is hereby amended by adding the following sentence: "All emergency escape and rescue windows provided as a means of egress from a basement or basement bedroom shall have a sill height of not more than 36 inches above the floor."

37. **Section R310.2.3.1 Ladder and steps** is hereby amended by replacing "44 inches" with "36 inches"

38. **Section R311.2 Egress door** is hereby amended by adding the following subsection: "**R311.2.1 Second exit egress door.** A minimum of one other door (other than the door used to comply with 311.2) shall be provided that meets all the requirements for an exit door in 311.2 except door type. All such exits shall discharge to grade. The required exit doors shall not pass through a garage."

39. **Section R313.1 Townhouse automatic fire sprinkler systems** is hereby amended by entirely deleting and replacing with "An automatic residential fire sprinkler system shall be installed in townhouses.
    Exceptions:
    1. An automatic residential fire sprinkler system shall not be required in any townhouse constructed on a lot that has a final approved plat as of the effective date of this ordinance
    2. An automatic residential fire sprinkler system shall not be required where additions or alterations are made to existing townhouses that do not have an automatic residential fire sprinkler system installed.
    3. An automatic residential fire sprinkler system shall not be required where, as determined and certified by an approved fire protection engineer, the existing domestic water service system cannot meet the standards set forth for the installation of such system. The applicant shall

reimburse the Village for the actual cost of service invoiced to the Village by the fire protection engineer."

Subsection R313.1.1 Design and installation is not modified and is in full force as written.

40. **Section R313.2 One- and two-family dwellings automatic fire sprinkler systems** is hereby amended by entirely deleting and replacing with "An automatic residential fire sprinkler system shall be installed in two-family dwellings.

    Exceptions:

    1. An automatic residential fire sprinkler system shall not be required for any detached one-family dwelling.
    2. An automatic residential fire sprinkler system shall not be required in any two-family dwelling constructed on a lot that has a final approved plat as of the effective date of this ordinance.
    3. An automatic residential fire sprinkler system shall not be required for additions or alterations to existing buildings that are not already provided with an automatic residential sprinkler system.
    4. An automatic residential fire sprinkler system shall not be required where, as determined and certified by an approved fire protection engineer, the existing domestic water service system cannot meet the standards set forth for the installation of such system. The applicant shall reimburse the Village for the actual cost of service invoiced to the Village by the fire protection engineer."

    Subsection R313.2.1 Design and installation is not modified and is in full force as written.

41. **Section R314.1 General** is hereby amended by adding "and the Illinois smoke detector act (425 ILCS 60)."

42. **Section R315.1 General** is hereby amended by adding "and the Illinois carbon monoxide alarm detector act (public act 094-0741)."

43. **Section R317.1.2 Ground contact** is hereby amended by entirely deleting and replacing with "Supports for permanent structures intended for human occupancy and which come in contact with the ground shall not be constructed of wood."

44. **Section R317.1.4 Wood columns** is hereby amended by entirely deleting and replacing with "Posts, poles, and columns supporting structures that are embedded in concrete, in direct contact with the earth, or are embedded in concrete exposed to the weather are prohibited."

45. **Section R319.1 Address identification** is hereby amended by adding the following sentence: "Site addresses shall comply with all village of Sugar Grove ordinances."

46. **Section R322.1 General** is hereby amended by adding the following ", the Kane County storm water ordinance, FEMA, Village of Sugar Grove flood plain ordinance , and all applicable federal, state, and locally adopted flood plain ordinances."

47. **Section R401.1 Application** is hereby amended by entirely deleting and replacing with "The provisions of this chapter shall control the design and construction of the foundation and foundation spaces of all buildings and structures. Wood foundations are prohibited."

48. **Sections R402.1 Wood foundations** and all subsections are hereby amended by entirely deleting.

49. **Section R403.1 General** is hereby amended by deleting the words "wood foundations" in the first sentence.

50. **Section R403.1.1 Minimum size** is hereby amended by entirely deleting and replacing with "Minimum sizes for concrete and masonry footings shall be as follows. Footing width shall be a minimum of twice the width of the wall it is supporting, or a minimum of 18-inches, whichever is greater. Unless soil conditions warrant a greater width, or so designed and certified by a license design professional, footing projections shall be equal to ¼ the width of the footing and the wall must fit center on the footing. Single story structures may be placed on 12-inch wide by 42-inch deep trench footing. Footing thickness shall be a minimum of 8-inches or the same depth as the wall thickness, whichever is greater, or as designed by a licensed design professional. See amended Figure R403.1(1) for an illustration."

51. **Table R403.1 Minimum Width and Thickness for Concrete Footings** is hereby amended by entirely deleting.

52. **Figure R403.1(1) Plain Concrete Footings with Masonry and Concrete Stem Walls** is hereby amended by entirely deleting and replacing with:

F. <u>Figure R403.1 (1) Concrete and masonry foundation details:</u> Delete this figure and substitute the following therefore:

Figure R403.1 (1)
Concrete and Masonry Foundation Details

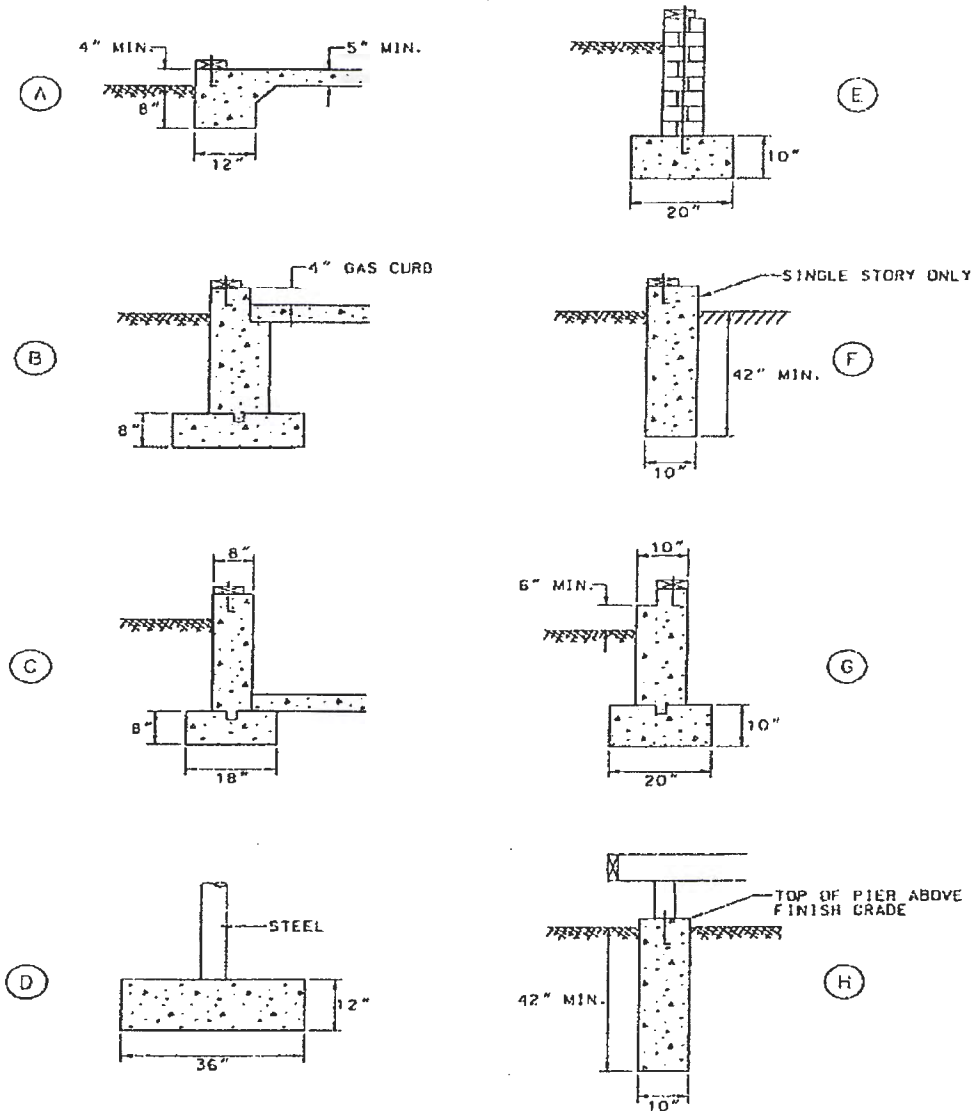

A= Typical turned down garage slab.
B= Typical foundation detail for attached garage with gas curb.
C= Typical footing and wall detail.
D= Typical pier pad for lolly column in basement.
E= Typical footing and wall detail for masonry block wall.
F= Typical trench foundation.
G= Typical wall and footing for brick veneer home.
H= Typical posthole detail for deck.

53. **Figure R403.1(2) Permanent Wood Foundation Basement Wall Section** is hereby amended by entirely deleting.

54. **Figure R403.1(3) Permanent Wood Foundation Crawl Space Section** is hereby amended by entirely deleting.

55. **Section R403.1.4.1 Frost protection** is hereby amended by entirely deleting exception 3 and replacing with "3. Decks not supported by a dwelling and not serving as a portion of the required egress to grade need not be provided with footings that extend below the frost line."

56. **Section R403.2 Footings for wood foundations** is hereby amended by entirely deleting.

57. **Section R403.3 Frost-protected shallow foundations** is hereby amended by adding the following sentence: "Frost protected shallow foundations shall be allowed only with specific permission of the code official."

58. **Section R404.1.5.3 Pier and curtain wall foundations** is hereby amended by entirely deleting.

59. **Section R404.2 Wood foundation walls** and all subsections are hereby amended by entirely deleting.

60. **Section R405.1 Foundation drainage** is hereby amended by entirely deleting the exception.

61. **Section R405.2 Wood foundations** and all subsections are hereby amended by entirely deleting.

62. **Sections R406.3 Dampproofing for wood foundations** and all subsections are hereby amended by entirely deleting.

63. **Section R408 Under-Floor Space** is hereby amended by adding the following subsection: "**R408.8 Crawl space floor.** In all crawl space areas, a minimum of a 2-inch thick slush coat of poured concrete shall be installed over a minimum of 4-inches of stone in the crawl space, with a minimum of a six (6) mil thick polyethylene film moisture barrier with all joints lapped a minimum of 6-inches."

64. **Section R502.7.1 Bridging** is hereby amended by entirely deleting and replacing with "Joists shall be supported laterally by solid blocking, or diagonal bridging (wood or metal) at intervals not exceeding 8-feet. The Code Official may approve alternative methods." The exception is not modified and is in full force as written.

65. **Section R502.11.4 Truss design drawings** is hereby amended by adding to number 4.1: ", including snow load" and adding "13. Layout design."

66. **Section R504 Pressure preserved treated wood floors (on ground)** and all subsections are hereby amended by entirely deleting.

67. **Section R506.1 General** is hereby amended by replacing "3.5 inches" with "4 inches" and adding the following sentence: "Concrete slab-on-ground floors for garage floors shall include a minimum of 6x6x10x10 welded wire fabric embedded in the mid cross section of the slab or fiber mesh reinforcing."

68. **Section R506.2.1 Fill** is hereby amended by adding the following subsection: "**R506.2.1.1 Back-fill under concrete floors at attached garages.** The sub-base for poured concrete garage floors shall be undisturbed inorganic soil. All fill material shall be clean, compactable graded sand, crushed stones, or gravel placed in compacted lifts. The use of any soils as fill material is prohibited.
Exception: Compacted non-organic material as fill shall be permitted when #4 rebar are doweled into the foundation wall a minimum of 4 inches extending into the garage floor area a minimum of 3 feet, placed 24 inches on center around the 3 walls forming the garage area. Any practice of soaking the soils within this area will be done in strict conformance with the locally applicable water conservation ordinance and shall be metered."

69. **Section R506.2.2 Base** is hereby amended by replacing "consisting of clean" with "consisting of compacted clean"

70. **Section R703.9 Exterior insulation and finish system (EIFS)/EIFS with drainage** is hereby amended by adding the following sentences: "All exterior insulation finish systems (EIFS) installed on any portion of a one- and two-family dwelling or accessory structure shall be installed only on masonry or metal substructure components. EIFS shall not be installed over, next to, or in contact with wood materials."

71. **Section R703.9 Exterior insulation and finish system (EIFS)/EIFS with drainage** is hereby amended by adding the following subsection: "**R703.9.3 EIFS special inspections**. Any and all exterior insulation finish system (EIFS) installed on any portion of a one- or two-family dwelling for an exterior covering requires a certification or proper installation be submitted as a special inspection. Before permit issuance, a statement of special inspections prepared by the registered design professional shall be submitted detailing the individuals and approved agencies intended to be retained for conducting these inspections. This report and signed certification shall be submitted to the village before any occupancy will be granted."

72. **Section R802.10.1 Truss design drawings** is hereby amended by adding to number 4.1: ", including snow load" and adding "number 13. Layout design."

73. **Section R903 Weather Protection** is hereby amended by adding the following subsection: "**R903.5 Gutters and Downspouts.** All one- and two-family dwellings shall be provided with gutter and downspouts unless omission is specifically permitted by the code official.

74. **Chapter 11 Energy Efficiency** is hereby entirely deleted and replaced with "The Energy Conservation Code most currently adopted by the State of Illinois and any adopted Village of Sugar Grove amendments."

75. **Section R1003.9 Termination** is hereby amended by adding the following sentence: "All wood or solid fuel burning fireplaces and stoves shall be equipped with an approved spark arrestor."

76. **Section M1201 General** is hereby amended by adding the following subsection: "M1201.3 Compliance. The installation of all mechanical appliances, systems, and equipment in one- and two-family dwellings shall comply with the applicable provisions of chapters 12 thru chapter 23 inclusive, the International Mechanical Code, and all Village of Sugar Grove amendments to the International Mechanical Code."

77. **Section M1307.3 Elevation of ignition source** is hereby amended by adding the following subsection: "**M1307.3.2 Heating units in garages.** Units designed to condition habitable spaces of the home shall not be located in a garage, except as permitted by 2015 International Mechanical Code section 303.3 exception #3. The installation shall comply with section 1307.3 Elevation of ignition source."

78. **Section M1602.2 Return air openings** is hereby amended by adding the following subsection: **"M1602.2.1 Return air vents.** Return air vents connected to the heating and cooling system, shall be located in every habitable room of the home, except as prohibited in Section M1602.2 of the code."

79. **Chapter 22 Special piping and storage systems** is hereby amended by entirely deleting.

80. **Section G2401 General** is hereby amended by adding the following subsection: "G2401.2 Compliance. The installation of fuel-gas piping systems, fuel-gas utilization equipment and related accessories, venting systems and combustion air configurations in one- and two-family dwellings shall comply with the applicable provisions of chapter 24, the International Fuel Gas Code, and all Village of Sugar Grove amendments to the International Fuel Gas Code."

81. **Chapters 25 through 32 Plumbing** are hereby entirely deleted and replaced with "The most current State of Illinois Plumbing Code, Kane County Health Department private sewage disposal system requirements, and any applicable adopted Village of Sugar Grove ordinances and amendments"

82. The following Appendices are adopted and inserted as part of this code:
    Appendix A - Sizing and Capacities of Gas Piping
    Appendix B - Sizing of Venting Systems Serving Appliances
    Appendix C - Exit Terminals of Mechanical Venting Systems
    Appendix D - Procedure for Safety Inspection of Existing Appliances
    Appendix F - Radon Control Methods
    Appendix H - Patio Covers
    Appendix K - Sound Transmissions
    Appendix N - Venting Methods

SECTION THREE: Miscellaneous

A. That if any section, subsection, sentence, clause or phrase of this ordinance is, for any reason, held to be unconstitutional, such decision shall not affect the validity of the remaining portions of this ordinance. The Village of Sugar Grove hereby declares that it would have passed this ordinance, and each section, subsection, clause, or phrase thereof, irrespective of the fact that any one or more sections, subsections, sentences, clauses, and phrases be declared unconstitutional.

B. Savings: That nothing in this Ordinance or in the codes hereby adopted shall be construed to affect any suit or proceeding impending in any court, or any rights acquired, or liability incurred, or any cause or causes of action acquired or existing, under any act or ordinance hereby repealed as cited in Section 3 of this ordinance; nor shall any just or legal right or remedy of any character be lost, impaired or affected by this ordinance.

C. Repealer: All ordinance or provisions of ordinances which are in conflict with this ordinance are hereby repealed.

D. Effective Date: This ordinance shall be in full force and effect from and after its passage, approval, and publication in pamphlet form as provided by law and after 6-1, 2016.

PASSED AND APPROVED by the President and Board of Trustees of the Village of Sugar Grove, Kane County, Illinois, on this 5th day of April, 2016.

	AYES	NAYS	ABSTAIN
Kevin Geary	✓		
Sean Herron	✓		
Mari Johnson	✓		
Ted Koch	✓		
Rick Montalto	✓		
David Paluch	✓		
Sean Michels			

P. Sean Michels

P. Sean Michels, Village President,
Village of Sugar Grove, Kane County, Illinois

ATTEST: Cynthia L. Galbreath

Cynthia L. Galbreath, Village Clerk,
Village of Sugar Grove, Kane County, Illinois

VILLAGE OF SUGAR GROVE NOT FOR PROFIT SEAL 1957 ILLINOIS

VILLAGE OF SUGAR GROVE

ORDINANCE NO. 2015-0405H

AN ORDINANCE ADOPTING CERTAIN NATIONAL CODES (2015 NATIONAL ELECTRIC CODE)

BE IT ORDAINED by the Board of Trustees of the Village of Sugar Grove, Kane County, Illinois as follows:

WHEREAS; the Village of Sugar Grove is not a home rule municipality within Article VII, Section 6A of the 1970 Constitution of the State of Illinois and therefore pursuant to those powers granted to it under Chapter 24, Paragraph 132 et. seq. of the Illinois Revised Statutes, and,

WHEREAS; the Board of Trustees finds that the best interest of the Village of Sugar Grove and the health and welfare of the residents of the Village are best served by regulating the construction, reconstruction, and maintenance of buildings and structure with the Village,

NOW THEREFORE BE IT ORDAINED by the President and Board of Trustees of the Village of Sugar Grove, Kane County, Illinois, as follows:

SECTION ONE: That Section, Chapter 1 of the Village Code shall be amended as follows:

Adoption: That a certain document entitled "NFPA 70: The National Electrical Code, 2014 Edition" published by the National Fire Protection Association, One Batterymarch Park, Quincy, Massachusetts, one copy of which is on file at the Building Division of the Community Development Department of the Village of Sugar Grove, is hereby adopted as the "Electrical Code" for the Village of Sugar Grove for regulating the design, construction, quality of materials, erection, installation, alteration, repair, location, relocation, replacement, addition to, use or maintenance of electrical systems and equipment in the Village of Sugar Grove as provided; and each and all of the regulations, provisions, penalties, conditions and terms of said "NFPA 70: National Electrical Code, 2014 Edition" are adopted and made a part hereof, as if fully set out in the Code with the additions, insertions, deletions and changes prescribed in this ordinance.

SECTION TWO: That the sections of said codes adopted herein are revised and amended as follows:

Amendments: **2014 National Electrical Code**

1. **Article 110.12 Mechanical Execution of Work** is hereby amended by adding the following subsection: "(C) **Unused Wiring.** All wiring, fittings, and electrical materials not in use shall be removed."

2. **Article 110.13 (A) Mounting** is hereby amended by adding the following subsection: "**(C) Electrical Panel Mounting.** All electric panels mounted on concrete or masonry walls that are either exterior walls or below grade, shall have a minimum of 1/2 inch plywood installed behind

the panel, or the panel shall be mounted to structural mounting channel that provides a minimum 1/2 inch airspace between the panel and the wall, for the purposes of support and to help prevent moisture entering the panel. Such mounting shall allow panel replacement if required."

3. **Article 210.8(B) Other Than Dwelling Units** is hereby amended by adding the following subsections:
(9) Crawl spaces - at or below grade level
(10) Unfinished basements

Exception No. 1 to (10): Receptacles that are not readily accessible.
Exception No. 2 to (10): A single receptacle or a duplex receptacle for two appliances located within dedicated space for each appliance that, in normal use, is not easily moved from one place to another and that is cord-and-plug connected in accordance with 2014 National Electrical Code sections 400.7(A)(6), (A)(7), or (A)(8).
Exception No. 3 to (10): A receptacle supplying only a permanently installed fire alarm or burglar alarm system shall not be required to have ground-fault circuit-interrupter protection.

(11) All general use receptacles installed within 6'-0" of the outside edge of a sink or mop basin - excluding critical care areas in health care facilities where the toilet and basin are installed within the patient room."

4. **Article 210.52(C)(2) Island Counter Spaces** is hereby amended by adding the following sentence: "At least one receptacle outlet shall be installed at each end of an island counter space."

5. **Article 210.52(G)(1) Basement, Garages, and Accessory Buildings** is hereby amended by adding the following sentence: "A minimum of one overhead receptacle shall be installed for each garage door in any residential dwelling unit in addition to the code required garage convenience receptacle."

6. **Article 210.70(A)(3) Storage or Equipment Spaces** is hereby amended by adding the following sentence: "When a sump pump or ejector pump is installed in an area not illuminated, a light shall be provided."

7. **Article 210.70 Lighting Outlets Required** is hereby amended by adding the following subsection: "**(D) Illumination of Mechanical Equipment.** All occupancies shall have luminaries installed within six (6) feet of the front of all electric panels and within six (6) feet of mechanical heating equipment to enable servicing the equipment."

8. **Article 210.70(A) Dwelling Units** is hereby amended by adding the following subsection: "**(4) Ceiling Box Support.** All ceiling mounted lighting outlet boxes installed more than three feet from all walls of any room in a dwelling unit shall be listed and shall be marked by the manufacturer as suitable for sole-support of a ceiling-suspended (paddle) fan and shall be secured according to the listing directions. The marking shall include the maximum weight to be supported. Dwelling garages, basements, closets, and bathrooms are excluded."

9. **Article 225.35 Access to Occupants** is hereby amended by adding the following sentences: "Each tenant shall have direct access to a main service disconnecting means and all panel boards, etc. that contain breakers or fuses that protect any electrical devices in that tenant unit. (Direct

access means a common area that has no locks or the tenant can get to the panel or switchboard without going through another tenant space.)"

10. **Article 230.1 Scope** is hereby amended by adding the following sentence: "Electrical service attachments shall be installed in accordance with the requirements of the electrical utility company, subject to the approval of the Code Official."

11. **Article 230.30 Installation** is hereby amended by adding the following subsection: "**(C) Service Conductors in Yards**. Electrical services for single-family homes shall be located on the side of the house closest to the electrical source. The service may only be located on the rear of the house if the garage is located on the side closest to the electrical source. All conductors running from the electrical source shall run parallel to the property line to a point 90 degrees from the electrical service. Conductors shall not run through any portion of the rear yard that would prevent the homeowner from constructing an addition or pool without having to relocate the electrical service conductors."

12. **Article 230.70 General** is hereby amended by adding the sentence: "The service disconnecting means shall be installed at a readily accessible location, either outside of a building or structure, or inside at or within 5 feet of the meter enclosure" and by adding the following subsection: "**(D) Exterior Disconnect for Services Over 400A.** All buildings with a main service at 400 amps or more shall provide a means of disconnect at the building exterior."

13. **Article 230.91 Location** is hereby amended by adding the following sentence: "The service overcurrent device shall be connected by no more than 5 feet of raceway or service entrance cable from the meter device in dwellings."

14. **Article 240.24(B) Occupancy** is hereby amended by adding the following sentences: "Each tenant shall have direct access to a main service disconnecting means and all panel boards, etc. that contain breakers or fuses that protect any electrical devices in that tenant unit. (Direct access means a common area that has no locks or the tenant can get to the panel or switchboard without going through another tenant space.)"

15. **Article 300.1(A) All Wiring Installations** is hereby amended by adding the following subsection: "**(1) Non-residential Uses.** With the exception of one- and two- family dwellings and townhouses, all current carrying conductors exceeding 50 volts shall be installed in rigid metal conduit, intermediate metallic conduit, electrical metallic tubing, or flexible metallic tubing with the exception that PVC conduit can be used for corrosive or other special application areas."

16. **Article 300.11 Securing and Supporting** is hereby amended by adding the following subsection: "**(D) Independent Supporting Methods.** All lighting fixtures, panel boards, switchgear, and / or supporting devices for conduit systems, installed in buildings or structures shall be installed and supported by the building structural components, completely independent of roof or floor deck, piping or ductwork, drywall, or ceiling tile. Lighting fixtures (in ceiling grid systems) shall be supported in accordance to manufacturer's requirements."

17. **Article 314.3 Nonmetallic Boxes** is hereby amended by adding the following sentence: "The use of non-metallic boxes is prohibited except for low voltage applications." and entirely deleting exceptions 1 and 2.

18. **Article 334.40(A) Boxes of Insulating Material** is hereby amended by entirely deleting

19. **Article 334.10 Uses Permitted** is hereby amended by adding the following sentence: "Type NM, Type NMC, and Type NMS cable wiring methods shall be permitted to be used in one- and two-family dwellings and townhouses only."

20. **Article 334.15 Exposed Work** shall be amended by adding the following subsection: "**(D) All Unfinished Areas**. Any exposed cable 7 feet (213.36cm) or closer to the floor must be protected with a durable building material or sleeved in an approved manner.

21. **Article 394 Concealed Knob-and-Tube Wiring** is hereby amended by adding the following subsection: "**394.9 Uses prohibited**. The use of concealed knob-and-tube wiring is prohibited. Existing installations shall not require removal, alteration, or abandonment of, nor prevent the continued utilization and maintenance of properly maintained knob-and-tube wiring lawfully in existence at the time of the adoption of this code. Such installations may only be repaired and shall not be expanded."

22. **Article 404.8(A) Location** is hereby amended by adding the following sentences: " The required wall switch for lighting outlets at every habitable room, bathrooms, accessible attics, underfloor spaces, utility rooms, each area of an unfinished basement, and equipment spaces shall be installed at the usual point of entry to these spaces."

23. **Article 695.3(B) Multiple Sources** is hereby amended by adding the following subsection: "**(3) Signage.** Where a generator provides a secondary source for a fire pump, and the generator feeds other systems, clearly marked key operated shunt trip switch/es must be provided at the fire panel allowing Fire Department personnel the ability to open main breakers to panels not feeding the fire pump."

24. **Article 701.5 Transfer equipment** is hereby amended by adding the following subsection: "**(D) Transfer Equipment Requirements**: Open type transfer switches are the only approved method for connection of standby systems. All transfer switch connections shall be "break before make" to insure the complete separation from the utility system and the generator supply. No parallel operation with the utility system shall be allowed. A minimum time delay of three (3) seconds and a maximum of ten (10) seconds after loss of utility power should be established before starting the generator. Utilization of Kirk Key systems or other mechanical means of isolating generating sources from the utility source are not allowed."

SECTION THREE: Miscellaneous

A. That if any section, subsection, sentence, clause or phrase of this ordinance is, for any reason, held to be unconstitutional, such decision shall not affect the validity of the remaining portions of this ordinance. The Village of Sugar Grove hereby declares that it would have passed this ordinance, and each section, subsection, clause or phrase thereof, irrespective of the fact that any one or more sections, subsections, sentences, clauses and phrases be declared unconstitutional.

B. Savings: That nothing in this Ordinance or in the codes hereby adopted shall be construed to affect any suit or proceeding impending in any court, or any rights acquired, or liability incurred, or any cause or causes of action acquired or existing, under any act or ordinance hereby repealed as cited in Section 3 of this ordinance; nor shall any just or legal right or remedy of any character be lost, impaired or affected by this ordinance.

C. Repealer: All ordinance or provisions of ordinances which are in conflict with this ordinance are hereby repealed.

D. Effective Date: This ordinance shall be in full force and effect from and after its passage, approval, and publication in pamphlet form as provided by law and after 6- 1, 2016.

PASSED AND APPROVED by the President and Board of Trustees of the Village of Sugar Grove, Kane County, Illinois, on this 5th day of April, 2016.

	AYES	NAYS	ABSTAIN
Kevin Geary	✓		
Sean Herron	✓		
Mari Johnson	✓		
Ted Koch	✓		
Rick Montalto	✓		
David Paluch	✓		
Sean Michels			

VILLAGE OF SUGAR GROVE NOT FOR PROFIT SEAL 1957 ILLINOIS

P. Sean Michels

P. Sean Michels, Village President,
Village of Sugar Grove, Kane County, Illinois

ATTEST: Cynthia L. Galbreath

Cynthia L. Galbreath, Village Clerk,
Village of Sugar Grove, Kane County, Illinois

VILLAGE OF SUGAR GROVE
KANE COUNTY, ILLINOIS

Ordinance No. 2016-0405G

AN ORDINANCE AMENDING TITLE 9 OF THE VILLAGE CODE (MISCELLANEOUS AMENDMENTS)

Adopted by the
Board of Trustees and President of the Village of Sugar Grove
this 5th day of April, 2016

Published in pamphlet form by authority of the
Board of Trustees of the Village of Sugar Grove, Kane County, Illinois
this 5th day of April, 2016

VILLAGE OF SUGAR GROVE

ORDINANCE NO. 2016-0405G

AN ORDINANCE AMENDING TITLE 9 OF THE VILLAGE CODE (MISCELLANEOUS AMENDMENTS)

BE IT ORDAINED by the Board of Trustees of the Village of Sugar Grove, Kane County, Illinois as follows:

WHEREAS; the Village of Sugar Grove is not a home rule municipality within Article VII, Section 6A of the 1970 Constitution of the State of Illinois and therefore pursuant to those powers granted to it under Chapter 24, Paragraph 132 *et. seq*. of the Illinois Revised Statutes, and,

WHEREAS; the Board of Trustees finds that the best interest of the Village of Sugar Grove and the health and welfare of the residents of the Village are best served by regulating the construction, reconstruction and maintenance of buildings and structure with the Village,

NOW THEREFORE BE IT ORDAINED by the President and Board of Trustees of the Village of Sugar Grove, Kane County, Illinois, as follows:

SECTION ONE: That Title 9, Chapter 1 of the Village Code shall be amended as follows:

Repeal: That section 9-1-3 of the Village Code adopting a Plumbing Code for the Village of Sugar Grove shall be amended by entirely deleting.

Repeal: That section 9-1-4 of the Village Code adopting an Energy Code for the Village of Sugar Grove shall be amended by entirely deleting.

Adoption: That Appendix G of document entitled "The International Residential Code, 2006 Edition" published by the International Code Council, 4051 West Flossmoor Road, Country Club Hills, Illinois, one copies of which are on file at the Building Division of the Community Development Department of the Village of Sugar Grove, is hereby adopted as the "Swimming Pool Code" for the Village of Sugar Grove for regulating the design, construction, quality of materials, erection, installation, alteration, repair, location , relocation, replacement, addition to, use or maintenance of every swimming pool, spa, and hot tub in the Village of Sugar Grove as provided; and each and all of the regulations, provisions, penalties, conditions and terms of said Appendix G of the "International Residential Code, 2006 Edition" are adopted and made a part hereof, as if fully set out in the Code with the additions, insertions, deletions and changes prescribed in this ordinance.

SECTION TWO: Miscellaneous

A. That if any section, subsection, sentence, clause or phrase of this ordinance is, for any reason, held to be unconstitutional, such decision shall not affect the validity of the remaining portions of this ordinance. The Village of Sugar Grove hereby declares that it would have passed this ordinance, and

each section, subsection, clause or phrase thereof, irrespective of the fact that any one or more sections, subsections, sentences, clauses and phrases be declared unconstitutional.

B. Savings: That nothing in this Ordinance or in the codes hereby adopted shall be construed to affect any suit or proceeding impending in any court, or any rights acquired, or liability incurred, or any cause or causes of action acquired or existing, under any act or ordinance hereby repealed as cited in Section 2 of this ordinance; nor shall any just or legal right or remedy of any character be lost, impaired or affected by this ordinance

C. Repealer: All ordinance or provisions of ordinances which are in conflict with this ordinance are hereby repealed.

D. Effective Date: This ordinance shall be in full force and effect from and after its passage, approval, and publication in pamphlet form as provided by law and after May 1, 2016.

PASSED AND APPROVED by the President and Board of Trustees of the Village of Sugar Grove, Kane County, Illinois, on this 5th day of April, 2016.

	AYES	NAYS	ABSTAIN
Kevin Geary	x		
Sean Herron	x		
Mari Johnson	x		
Ted Koch	x		
Rick Montalto	x		
David Paluch	x		
Sean Michels	x		

VILLAGE OF SUGAR GROVE NOT FOR PROFIT SEAL 1957 ILLINOIS

P. Sean Michels

P. Sean Michels, Village President,
Village of Sugar Grove, Kane County, Illinois

ATTEST: Cynthia L. Galbreath

Cynthia L. Galbreath, Village Clerk,
Village of Sugar Grove, Kane County, Illinois