SAMPLE DRAWING.

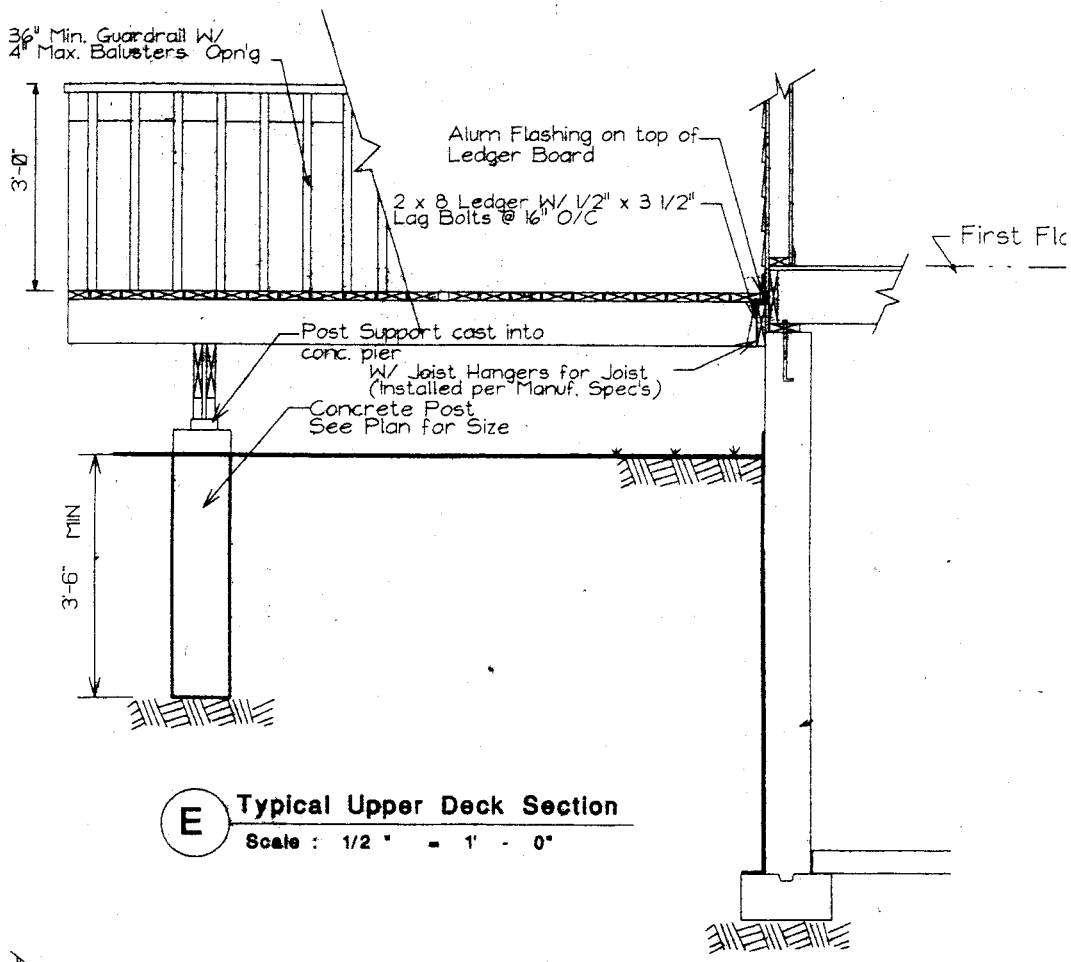

E **Typical Upper Deck Section**

Scale : 1/2 " = 1' - 0"